NOTES:

(N1) 1. FIT / FORM / FUNCTION SHALL FOLLOW PS-E.008.

(N2) △2 APPLY DOW CORNING III SILICONE COMPOUND.

BILL OF MATERIAL (CURRENT LEVEL)

ITEM	PT/ASSY	DESCRIPTION	TYPE	QTY.
1	50996	4" ROUND DRAIN COVER	PART	1
2	91149	O-RING, #2-042, EPDM, 65-75 DURO	PART	1
3	92853	DRAIN GRID REMOVAL TOOL	PART	1

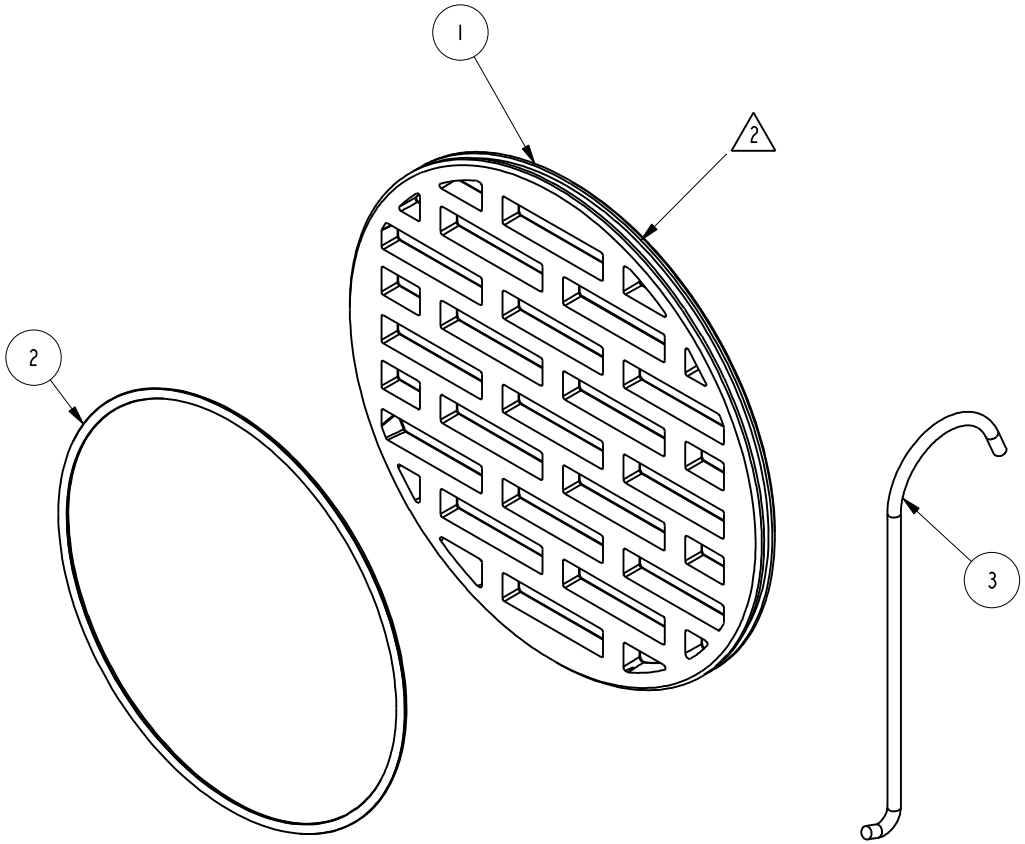

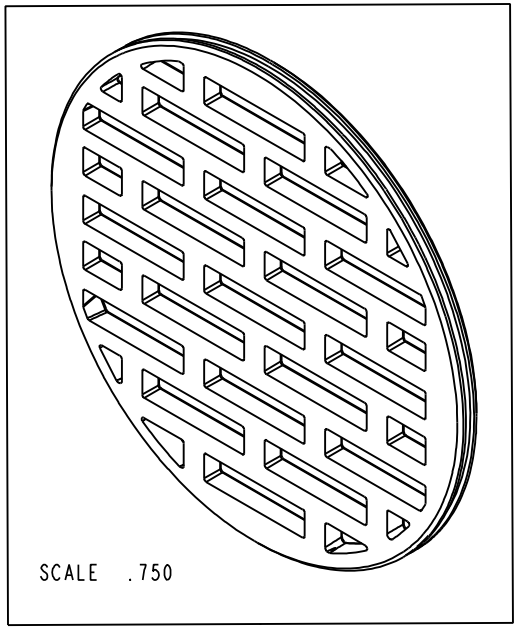

Joe Manga

Digitally signed by Joe Manga
DN: cn=Joe Manga, o, ou=Brasstech Inc., email=jmanga@brasstech.com, c=US
Date: 2016.11.01 10:28:40 -07'00'

ZONE	REV	DESCRIPTION	DATE	APPROVED
-	A	EN-3055a	05/19/16	J.M.
-	-	EN-2873a	10/07/15	J.M.

COPYRIGHT 2005 BRASSTECH, INC. THESE DRAWINGS AND THE DESIGNS DEPICTED HEREIN ARE THE PROPRIETARY PROPERTY OF BRASSTECH. ANY USE OR REPRODUCTION IS SUBJECT TO THE EXPRESS APPROVAL OF BRASSTECH. UNAUTHORIZED USE IS STRICTLY PROHIBITED. ALL RIGHTS RESERVED.

TESTING	-	-	-
ASSEMBLY	-	-	-
PLATING	-	-	-
POLISHING	-	NEXT ASSY	USED ON
MACHINING	-	APPLICATION	
TOOLING FIXTURE #		REMOVE ALL BURRS AND SHARP EDGES	

UNITS ARE: INCHES [MM]
TOLERANCES ARE:
FRACTIONS DECIMALS ANGLES
±1/16" .X ±.1 [2,5] ±1°
.XX ±.06 [1,5]
(X.XXX) DENOTES CRITICAL DIMS.
ALL THREADS ARE CRITICAL

DRAWN	R.S.	10/07/15
CHECKED	J.M.	10/07/15
APPROVED	J.M.	10/07/15

BRASSTECH INCORPORATED
2001 CARNEGIE AVE.
SANTA ANA, CA 92705
(949) 417-5207

DECORATIVE DRAIN ASM, ROUND 4"

DWG NO. 243-406 REV A

SCALE .750 REF. - SHEET 1 OF 1