LACAVA

AQUAPLANE

AQP-BX-19

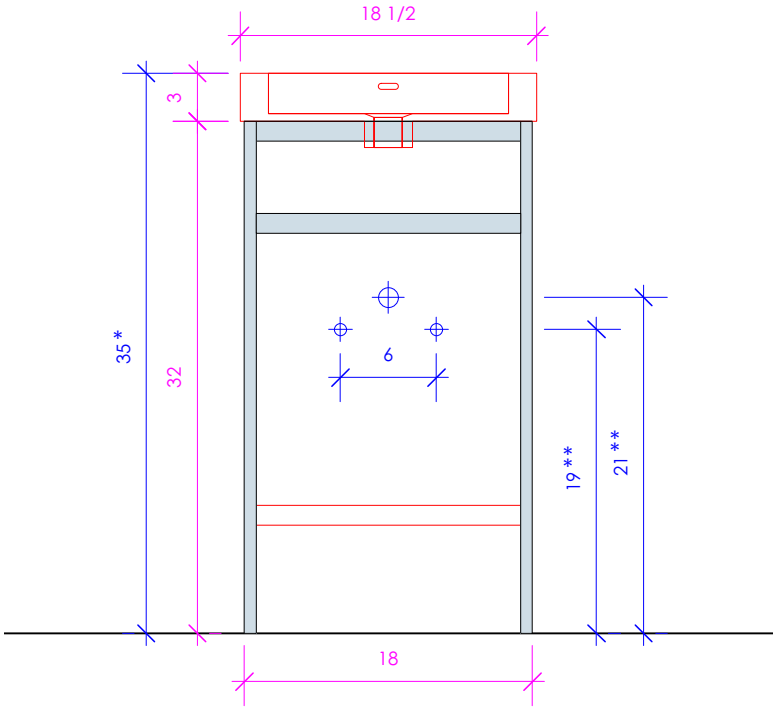

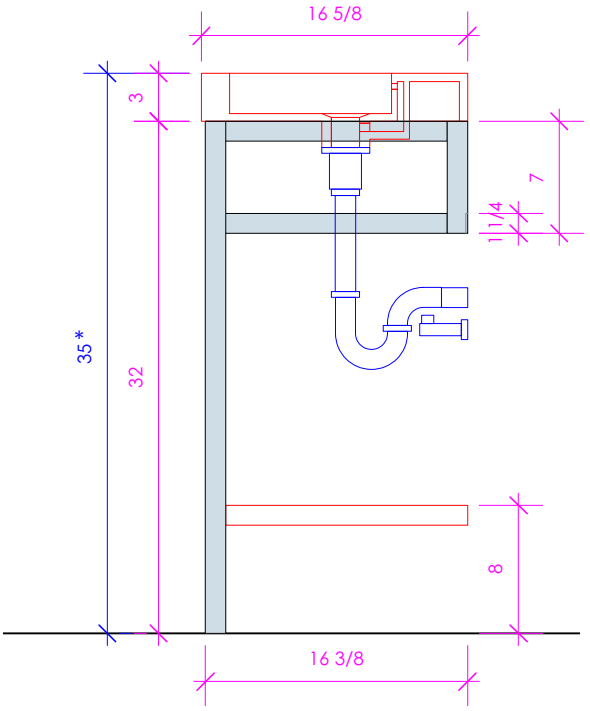

* Recommended installation height
** Recommended plumbing location

FEATURES:

- FLOOR STANDING CONSOLE VANITY
- WELDED METAL CONSOLE
- ADD ON SHELF CSS AVAILABLE (SOLD SEPARATELY)
- USED WITH 5035 SINK (SOLD SEPARATELY)
- PROUDLY HANDMADE IN THE USA

FINISHES:

WOOD:

STANDARD:	PREMIUM:	LUXURY:	
02 - NATURAL CHERRY	22 - GRAY ZEBRA	37 - WEATHERED OAK	
07 - NATURAL WALNUT	31 - WHITE OAK	52 - SILVER OAK	
24 - CLASSIC WALNUT	47 - SMOKY WALNUT	50 - HORIZON BLUE	
20 - ASH GRAY			
06 - WENGE	08 - MATTE WHITE	85 - GLOSS WHITE	08T1 - WHITE W/ TEXTURE
33 - AFRICAN MAHOGANY	35 - MATTE ARDESIA	88 - GLOSS ARDESIA	35T1 - ARDESIA W/ TEXTURE
	54 - MATTE TAUPE	84 - GLOSS TAUPE	54T1 - TAUPE W/ TEXTURE
	16 - MATTE BLACK	86 - GLOSS BLACK	16T1 - BLACK W/ TEXTURE

COUNTERTOP:

STONE:	QUARTZ:	SOLID SURFACE:
WH - BIANCO	PR - PURO	M - SATIN WHITE
LN - LINAC	FS - FOSSIL	G - POLISHED WHITE
SL - ATHENS	AH - ASH	
BN - STORM	CA - CREMA	

METALS:

METAL:

21 - BRUSHED STAINLESS STEEL
10 - POLISHED STAINLESS STEEL
51 - BRUSHED BRASS
44 - MATTE BLACK

LACAVA reserves the right to revise any dimension or information on this sheet without notice. Dimensions are nominal and may vary within an industry accepted tolerance of 1/4". Cabinets with 'vanity top' sinks are made to the matching sink and dimensions may vary. LACAVA is not responsible for any cutouts, countertops, or furniture made without the actual product or template. Differences in color, grain, appearance, and texture are inherent in all natural woodwork and should be expected. Variances in these qualities are not deemed manufacturing defects and will not be accepted as valid reasons for return or exchanges. Plumbing specifications are only a guideline and may need alteration based on application.

6630 WEST WRIGHTWOOD
CHICAGO, IL 60707

PH: 773-637-9600
FAX: 773-637-9601

LACAVA.COM
INFO@LACAVA.COM